ZZJG VALVE

Sleeve Plug Valve

TOTAL SOLUTIONS FOR FLOW SYSTEM

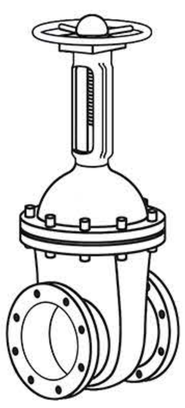
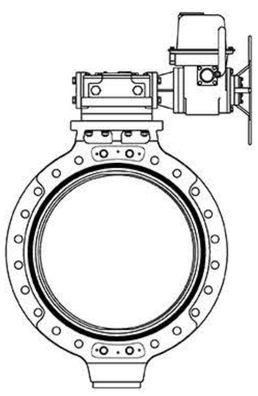
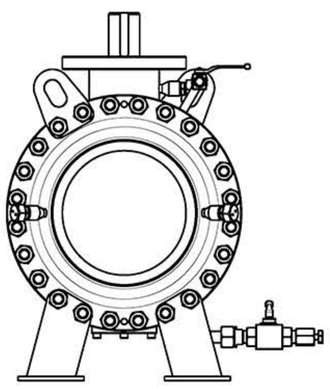
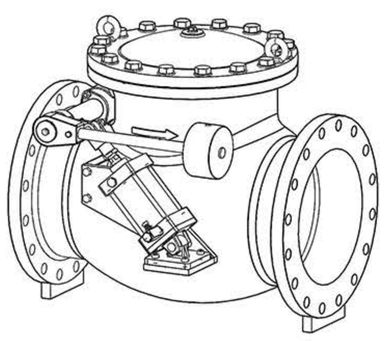
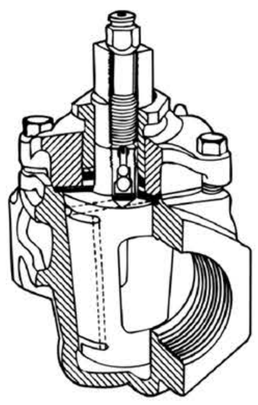
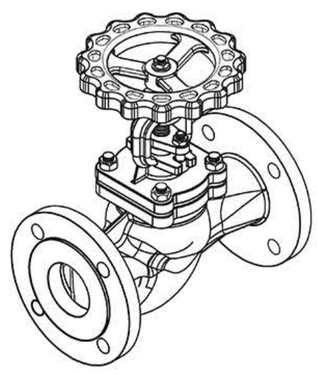

ABOUT US

ZZJG VALVE

ZHENGZHOU JINGGONG TECHNOLOGY CO., LTD is located in "Hometown of Valve in China" Gaoshan Town, Xingyang City, Henan Province. It is a high-tech enterprise in one line of design, manufacturing, sales and services.

Founded in 1981, after more than 40 years of development, it has become a professional valve manufacturer. With 103,180,000 RMB of registered capital, it covers an area of 26,000 ㎡ and owns professional workshops.

Aim: loyal to and customer, optimal management, rigorous and pragmatic and to promote China's valve industry to a higher level and ZZJG brand a leading position.

Certifications: ISO9001 Quality System Certification, ISO14001 Environment System Certification, ISO45001 Occupational Health and Safety Management Certification, TS Special Equipment License, API 609, API 6D, European Union CE Certification, EAC, SGS Certification, WRAS Certification, Utility Model Patent Certificates, etc.

Main products: PN0.25-32MPa, DN50-3000, soft/metal seal butterfly valves, plug valves, ball valves, gate valves, globe valves, check valves, control valves, etc.

Application: Water engineering, Electric power, Petroleum, Chemical industry, Petrochemical industry, Heating, Pharmaceuticals, Metallurgy, etc.

www.zzjgvalve.com

ZZJG VALVE

ZZJG CASES

The company strictly controls and checks the quality of every link and process. Product design has been incorporated into a set of extremely rigorous and precise procedures; from design, material selection, manufacturing, assembly to operation, every link must undergo rigorous testing procedures, strict control, and high quality, so that customers can use it. At the same time, we deeply feel our rigorous and pragmatic quality purpose.

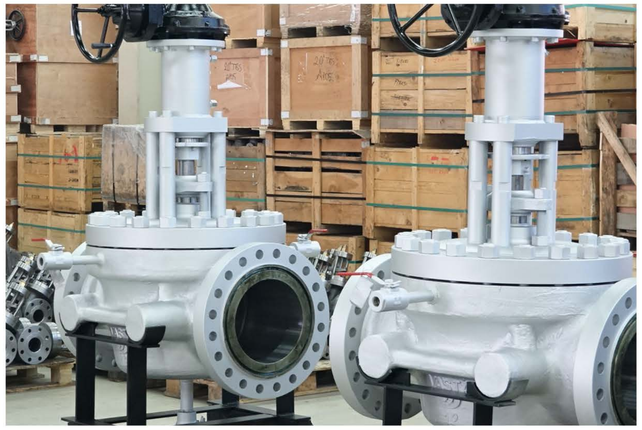

www.zzjgvalve.com

Sleeve Plug Valve

Overview

The plug valve is a quick-Open/Close straight-through valve that can also be used for medium with suspended particles due to the wiping effect of the movement between the screw seal surfaces and the complete protection of contact with the flowing medium when fully opened.

Applications

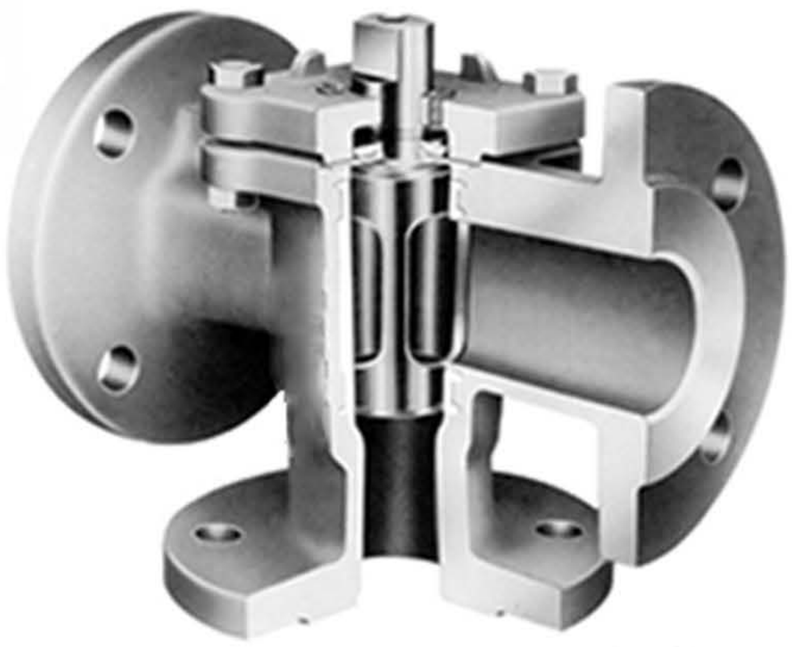

It is used to distribute the medium and change the flow direction of the medium, and its working temperature is not higher than 300°C.The nominal pressure is PN<1.6MPa.The nominal diameter is not more than 300mm. A multi-pass plug valve is recommended.

In the branch pipes, refining and cleaning equipment of oilfield exploitation, natural gas field exploitation, pipeline transportation, the nominal pressure is not greater than Class300, and the nominal diameter is not more than 300mm or the nominal pressure is not greater than Class7500, the nominal diameter is not more than 900mm, the working temperature is not higher than 340°C, and it is recommended to use oil-sealed conical plug valve.

For the equipment and pipelines of milk, juice, beer and other food enterprises and pharmaceutical factories, it is recommended to use austenitic stainless steel, tight-set conical plug valves.

In the large-scale chemical industry, in the pipeline and equipment containing corrosive media, the opening or closing speed is required to be fast, for the nitric acid-based medium, the PTFE sleeve sealed conical plug valve can be selected; For acetic acid-based media, Crl8Nil2M02Ti stainless steel PTFE sleeve can be selected with sealed conical plug valve.

In the pipeline and equipment of gas, natural gas and HVAC system, the nominal diameter is not more than 200nm.

Technical Parameters

Sealing Test1.1*PN, Shell Test1.5*PN (GB/T 13927 General Valve Pressure Test)

Technical Performance Specifications					
Nominal diameter (mm)	Nominal pressure (MPa)	Test pressure(MPa)		Applicable temperature (℃)	Applicable medium
		Shell test	Sealing test		
15-1000	0.6	0.9	0.66	0~100°C 0~200°C -29~550°C	water steam nitric acid caustic soda tanning liquid liquefied gas natural gas oil products etc.
	1.0	1.5	1.1		
	1.6	2.4	1.76		
	2.5	3.75	2.76		
	4.0	6.0	4.4		
	4.0	6.0	4.4		
	6.4	9.6	7.04		
	10.0	15.0	11.0		
	16.0	24.0	17.6		
15-1000	Class 150	3.0	2.2		
	Class 300	7.5	5.5		
	Class 600	16.5	12.1		
	Class 900	22.5	16.5		
	Class 1500	38.5	28.10		
	Class 2500	63.0	46.20		

Design & Manufacturing Standards		
No.	Design standards	Standard
1	Product design standards	GB/T 22130, API6D
2	Flange connection structure length standard	GB/T 12221, API6D
3	Butt welding connection structure length standard	GB/T 12221, API 6D EN588Fl/F4/FS
4	End flange connection size standard	GB/T 9113, JB/T 79, HG/T 20592, ASME B16.5 EN1092
5	Fire safety design standards for valves	GB/T 22130, API 607
6	Small diameter standards for valves	GB/T 22130, API 6D
7	Welding end connection size standard	GB/T 12224, ASME B16.25
8	Inspection and testing standards	GB/T 13927, API 6D DIN3230

ZZJG VALVE

Main Materials

The valve body and the bonnet are connected to form a body cavity that accommodates the valve trim and the flow medium, and the selected materials are the key to determine the applicable medium and working conditions of the valve.

The valve core and stem are important internal parts of the plug valve, which not only bear the pressure and corrosion of the medium, but also determine the sealing performance and service life of the plug valve, and its material selection is very important.

The operating temperature is limited. Metal hard seal plug valve, the valve seat is made of corrosion-resistant and wear-resistant metal, which can withstand higher temperatures, and the processing accuracy of the valve core is very high, which must be corrosion-resistant and wear-resistant, and needs to be hardened by surface hardening. For acidic media such as crude oil, you can press NACE. The MR0175 standard controls the performance and quality of the selected materials.

Main Materials & Applicable Media		
Material	Applicable temperature	Applicable media
A105, WCB	-29°C~425°C	Non-corrosive media: saturated steam and superheated steam, high and low temperature oil products, liquefied gas, compressed air, water, natural gas
304, 316, CF8, CF8M	-196°C~570°C	Corrosive media: acetic acid, nitric acid, alkali, bleaching liquid, carbonic acid, tanning liquid and many other chemical products
CF3, CF3M, 304L, 316L	-196°C~570°°C	Corrosive media: acetic acid, nitric acid, alkali, bleaching liquid, carbonic acid, salty water, tanning liquid and many other chemical products
WC6, WC9	-29°C~570°C	Non-corrosive media: saturated and superheated steam, cold and hot oil, natural gas and air
LCB, LF2	-46°C~200°C	Non-corrosive media: seawater, carbon dioxide, acetylene, propylene and ethylene

Sleeve Plug Valve

Main Components & Materials (subject to the order contract)		
No.	Name	Material
1	cock	stainless steel
2	body	cast steel
3	sleeve	PTFE
4	gasket	PTFE
5	pressure pad	stainless steel
6	bonnet	WCB
7	gland	WCB
8	packing	PTFE
9	wrench	WCB
10	bolt	8.8
11	locating sleeve	stainless steel
12	bolt	8.8
13	nut	10
14	bolt	8.8
15	bolt	8.8
16	ring	45

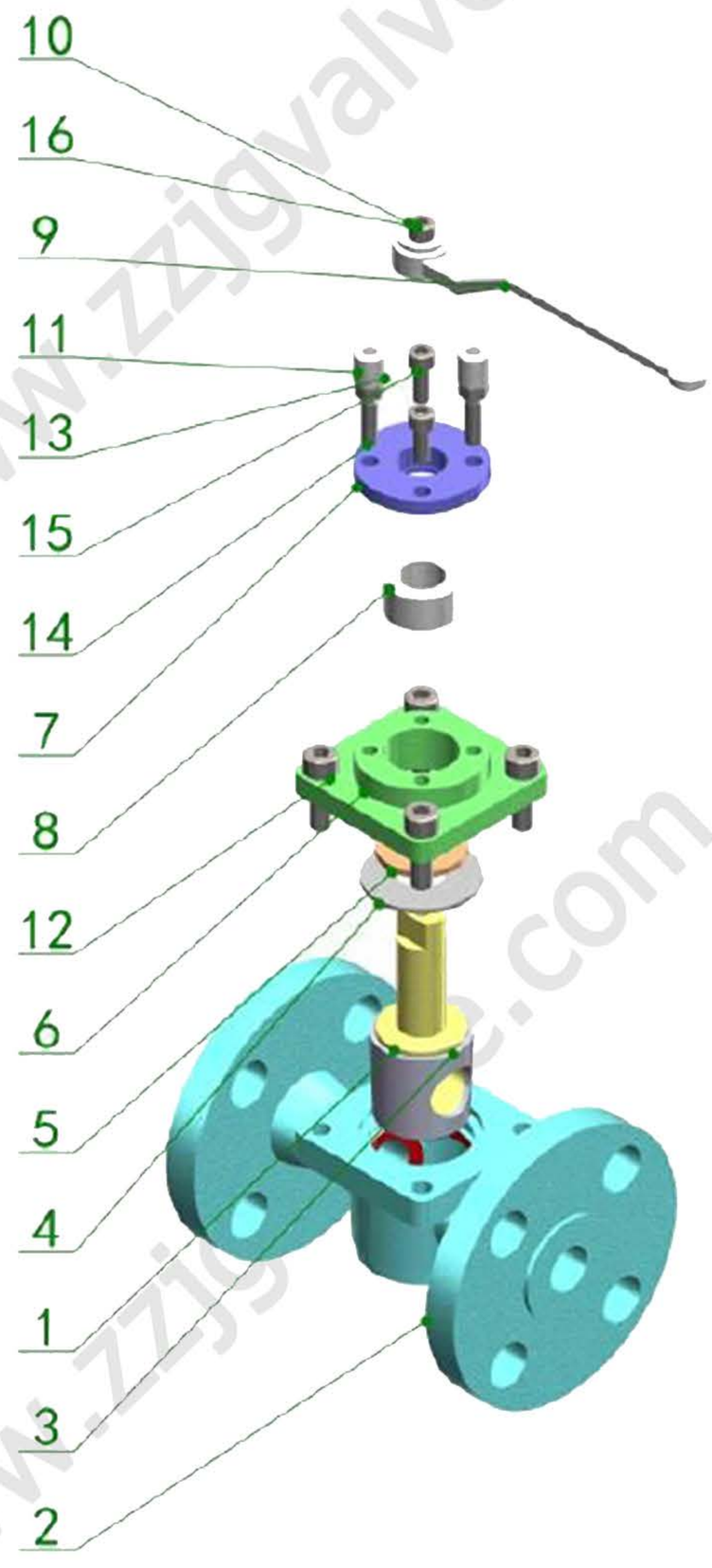

www.zzjgvalve.com

ZZJG VALVE

Features

F4, F46, PVDF, PP, PO, PE and other self-lubricating material bushings can be used according to the use temperature and working medium, which is well lubricated, and the friction coefficient of the sealing pair is small in the whole working process, and the plug body is flexible and has a long service life.

The design of the inlet and outlet end of the valve body and the structure of the double-groove sealing ring, the sealing specific pressure between the sealing pairs of the plug gradually changes during the rotation process, until it reaches the fully open or fully closed position, which produces sufficient sealing specific pressure and the sealing pair reaches zero leakage.

The double-channel groove sealing ring can not only make the bushing stable in the valve body without displacement, but also absorb the slight deformation of the bushing caused by the temperature difference, and at the same time produce strong friction between the bushing and the, which has the effect of automatic cleaning and improves the service life of the sealing surface.

www.zzjgvalve.com

Sleeve Plug Valve

The unique anti-lip sealing design on the top of the plunger adopts a combination of soft sealing material diaphragm and metal diaphragm and adjustment gasket to adjust the sealing pressure between the sealing surfaces, so that the plug rotates flexibly, and can ensure the sealing of the inlet and outlet ends and the middle flange connection ends.

Suitable for gas-solid with high wash ability Liquid-solid phase media. Such as PVC, urea, vinegar, caustic soda production equipment, or external leakage requirements of high media, such as HF, phosgene, etc.

The medium can flow in both directions, and the installation direction is not restricted, so as to achieve online maintenance and make it more convenient to use.

Unique design to prevent static electricity, safe to fire, safe to use.

Valve Closing Action & Flow Velocity Distribution

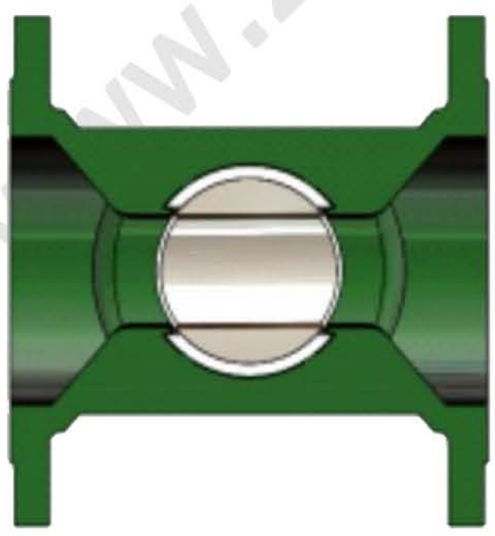

valve fully open

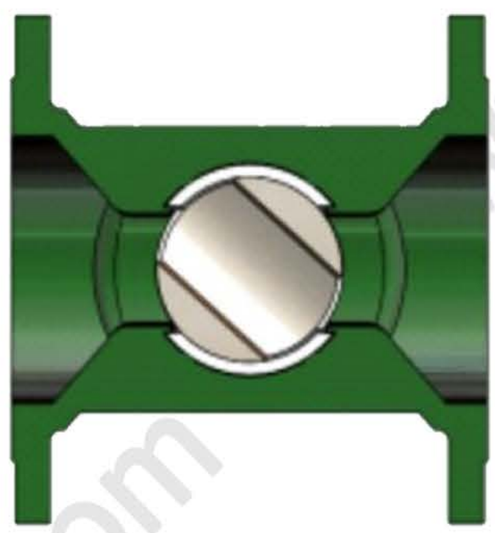

45°

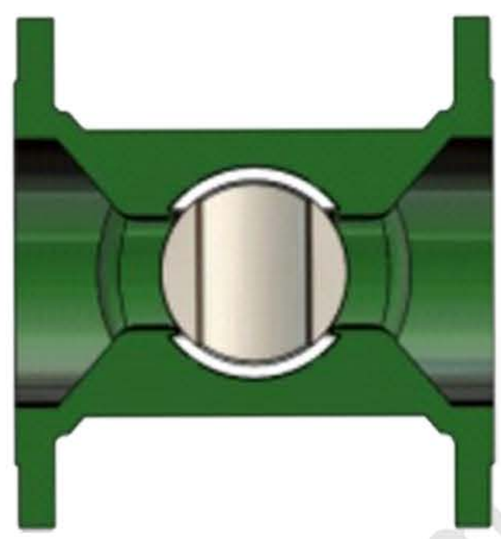

valve fully closed

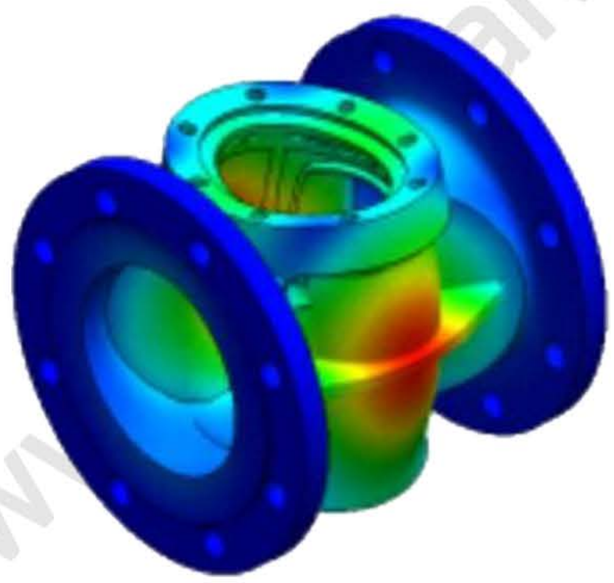

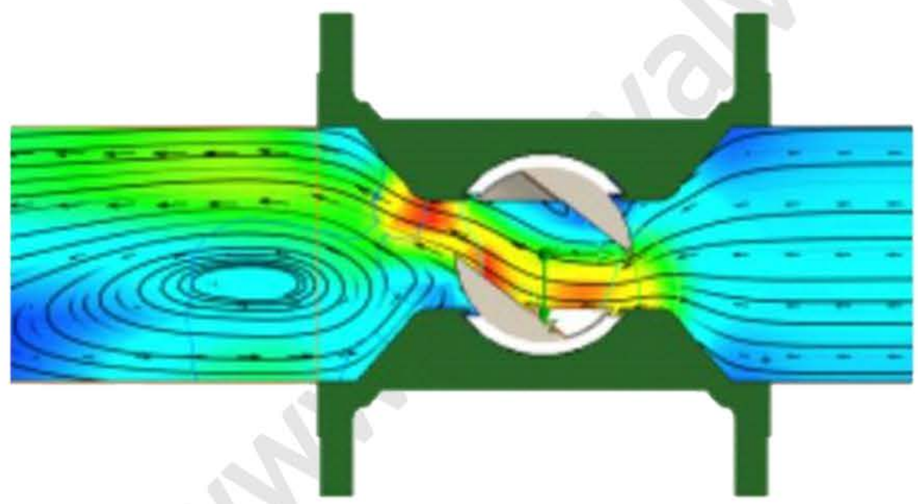

ZZJG VALVE

Three-way, four-way & jacket plug valves

Three-way and four-way plug valves are suitable for pipelines under various working conditions such as petroleum, chemical, pharmaceutical, fertilizer, power industry and other working conditions with pressure CLASS150-900LBS, PN1.0-16.0 and PN1.0-16.0 working temperature.

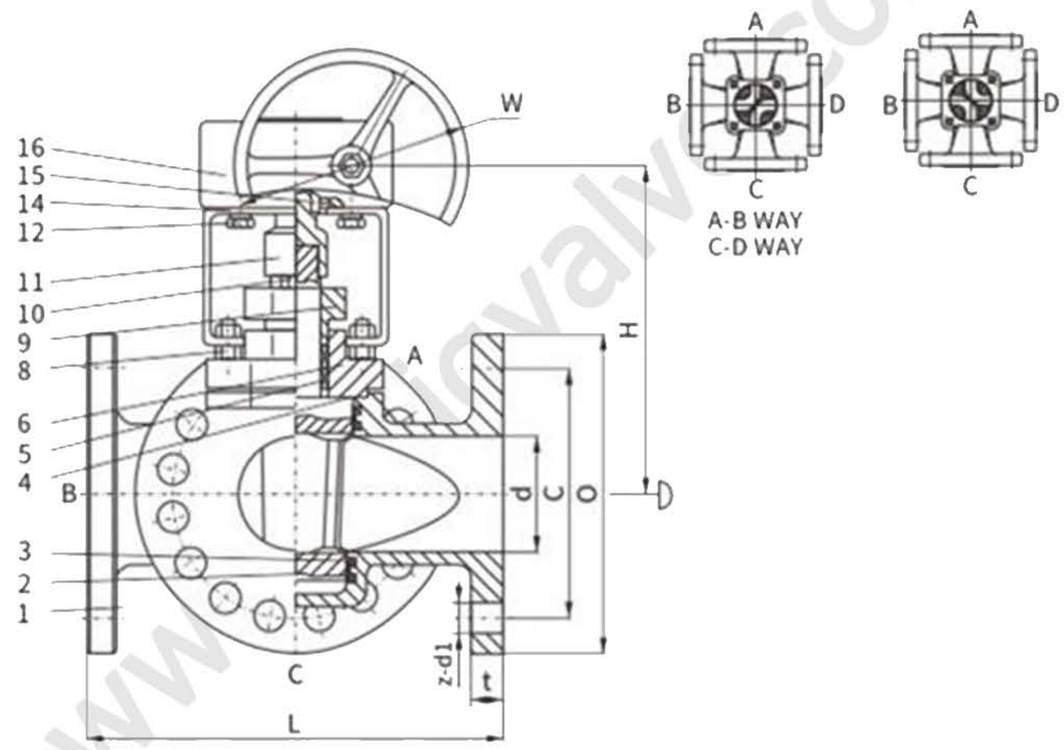

Main Sructural Features

1. The product has reasonable structure, reliable sealing, excellent performance and beautiful appearance.

2. It can be designed into various circulation forms (such as L-type, T-type, etc.) and various materials (such as cast iron, cast steel, stainless steel) according to the requirements of pipeline working conditions. Three-way and four-way plug valves with various sealing forms (such as hard seal, card sleeve seal, oil seal, etc.).

3.Part materials and flange sizes can be reasonably selected according to actual working conditions or user requirements to meet various engineering needs.

4. This series of valves can also be added with an insulation layer and used as an insulation valve.

Technical Specification	
Driving mode	wrench wheel, worm & worm gear, pneumatic, electric
Design standard	API 599, API 6D, GB/T 22130
Structure criteria	ASME B16.10, GB 12221, EN 558
Connecting flange	ASME B16.5, HB 20592, EN 1092
Test and inspection	API 598, API 6D, GB/T 13927, EN 12266

Product Performance Specification

Nominal pressure	Shell test（MPa）	Sealing test（MPa）
150LB	3.0	2.2
300LB	7.7	5.62
600LB	15.4	11.23
900LB	23.0	16.85
1500LB	37.5	27.5
1.6MPa	2.4	1.76
2.5MPa	3.75	2.75
4.0MPa	6.0	4.4
6.4MPa	9.6	7.04
10.0MPa	15.0	11.0
16.0MPa	24.0	17.6
25.0MPa	37.5	27.5

www.zzjgvalve.com

ZZJG VALVE

ANSI Sleeve Soft Plug Valve

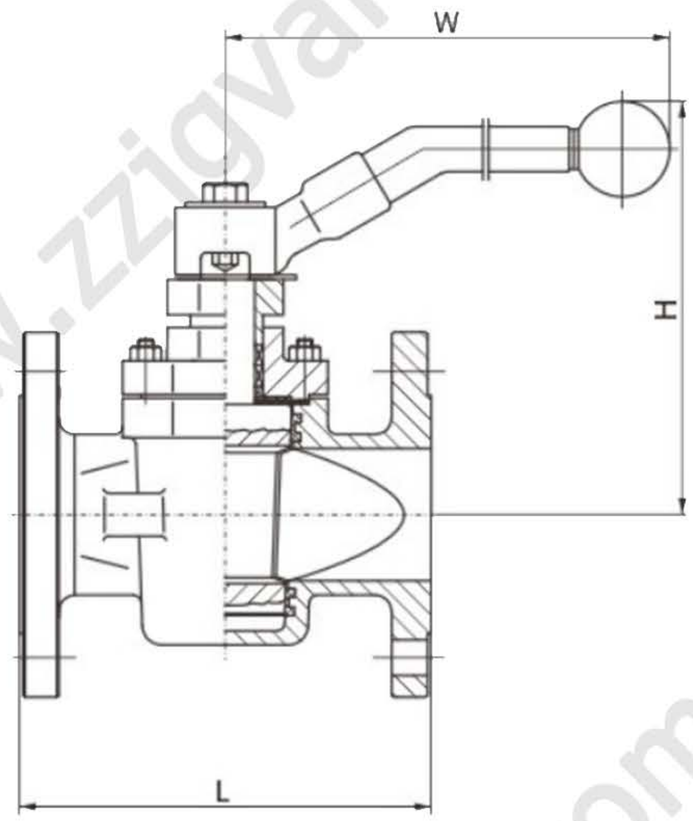

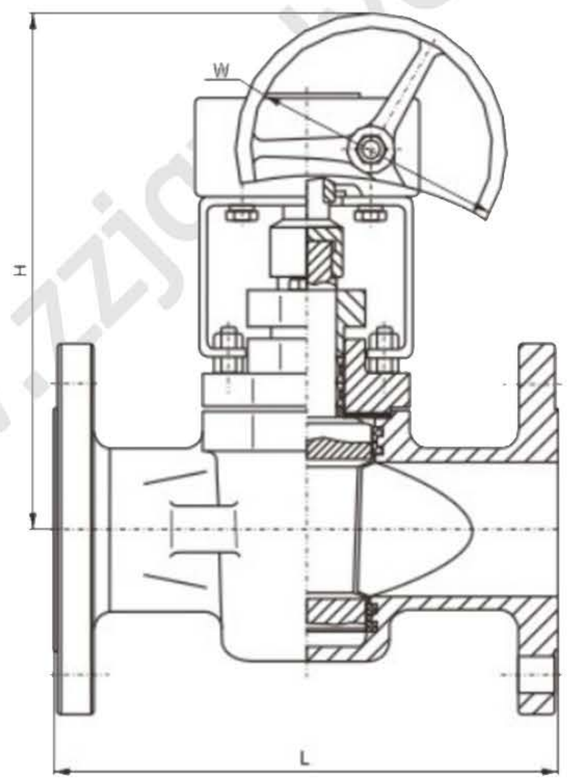

X343F/X43F-150LB																
DN	mm	15	20	25	32	40	50	65	80	100	125	150	200	250	300	350
	in	1/2	3/4	1	1 1/4	1 1/2	2	2 1/2	3	4	5	6	8	10	12	14
L		108	117	127	140	165	178	190	203	229	254	267	292	330	356	381
H		110	115	115	135	140	150	165	180	380	460	520	580	620	680	760
W		195	205	205	315	315	330	400	590	690	300	320	320	350	380	450

X343F/X43F-300LB																
DN	mm	15	20	25	32	40	50	65	80	100	125	150	200	250	300	350
	in	1/2	3/4	1	1 1/4	1 1/2	2	2 1/2	3	4	5	6	8	10	12	14
L		140	152	165	178	190	216	241	283	305	381	403	419	457	502	762
H		110	115	115	135	140	150	165	180	380	460	502	580	620	680	760
W		195	205	205	315	315	330	400	590	690	300	320	320	350	380	450

X343F/X43F-600LB																
DN	mm	15	20	25	32	40	50	65	80	100	125	150	200	250	300	350
	in	1/2	3/4	1	1 1/4	1 1/2	2	2 1/2	3	4	5	6	8	10	12	14
L		165	190	216	229	241	292	330	356	432	508	559	660	787	838	889
H		110	115	115	135	140	150	165	180	380	460	520	580	620	680	760
W		195	205	205	315	315	330	400	590	690	300	320	320	350	380	450

X343F/X43F-900LB																
DN	mm	15	20	25	32	40	50	65	80	100	125	150	200	250	300	350
	in	0.5	0.75	1	1.25	1.5	2	2.5	3	4	5	6	8	10	12	14
L		216	229	254	279	305	368	419	381	457	559	610	737	838	965	1029
H		110	115	115	135	140	150	165	180	380	460	520	580	620	680	760
W		195	205	205	315	315	330	400	590	690	300	320	320	350	380	450

www.zzjgvalve.com

DIN Sleeve Soft Plug Valve

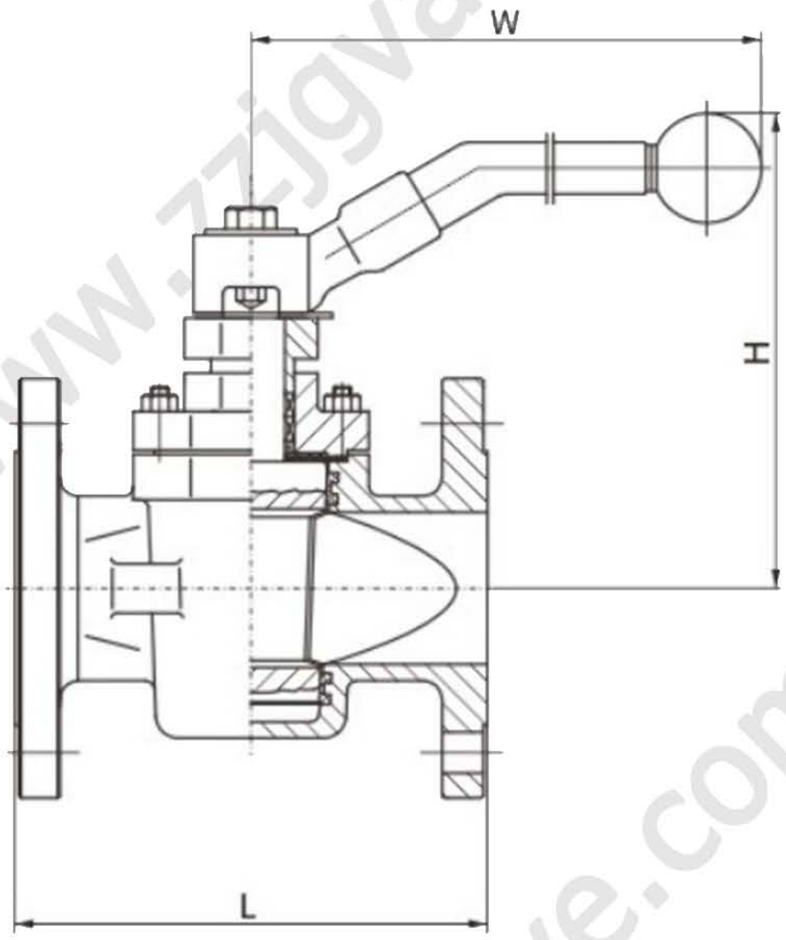

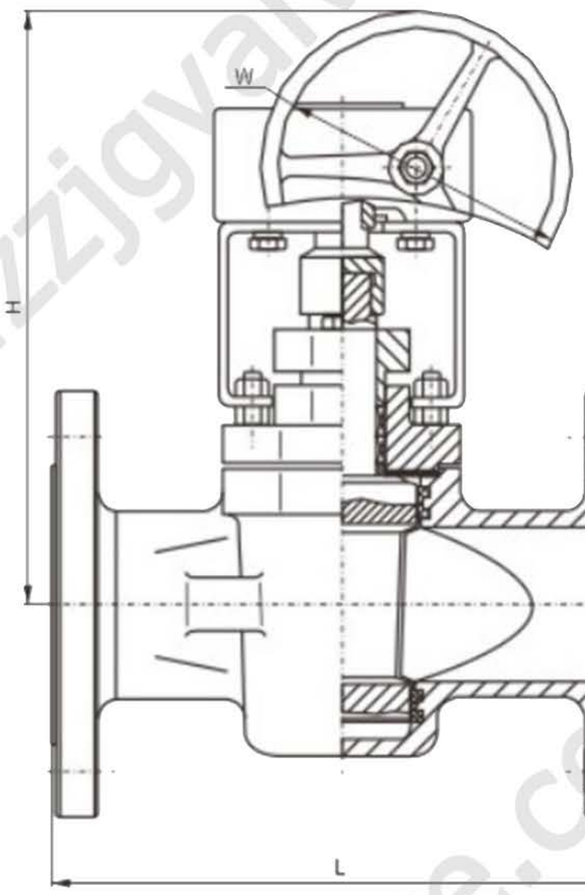

X343F/X43F-16/25															
DN-mm	15	20	25	32	40	50	65	80	100	125	150	200	250	300	350
L	130	150	160	180	200	230	290	310	350	400	480	600	730	850	980
H	150	155	160	180	190	200	220	230	380	460	520	580	620	680	740
W	195	205	205	315	315	330	400	590	690	300	320	320	350	380	380

X343F/X43F-40															
DN-mm	15	20	25	32	40	50	65	80	100	125	150	200	250	300	350
L	130	150	160	18	200	230	290	310	350	400	480	600	730	850	980
H	150	155	160	180	190	200	220	230	380	460	520	580	620	680	740
W	195	205	205	315	315	330	400	590	690	300	320	320	350	380	380

X343F/X43F-64															
DN-mm	15	20	25	32	40	50	65	80	100	125	150	200	250	300	350
L	130	150	160	180	200	230	290	310	350	400	480	600	730	850	980
H	150	155	160	180	190	200	220	230	380	460	520	580	620	680	740
W	195	205	205	315	315	330	400	590	690	300	320	320	350	380	380

www.zzjgvalve.com

Sleeve Plug Valve

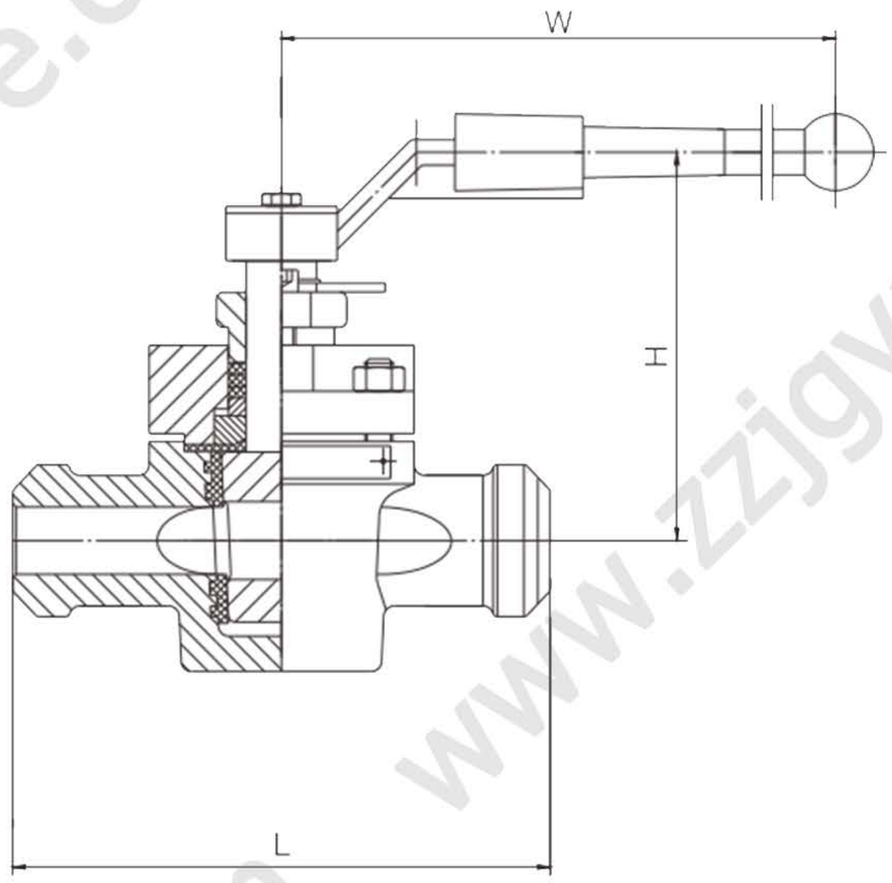

Butt Weld End ASME B16.25-2017									X343F/X43F-150LB
Nominal bore	Pipe number	Outer diameter of welding end		Nominal bore diameter		Machined inner diameter		Pipe wall thickness	
		inch	mm	inch	mm	inch	mm	inch	mm
2-1/2	40	2.88	73.0	2.469	62.6	2.479	62.79	0.203	5.0
	80			2.323	59.0	2.351	59.72	0.276	7.1
	160			2.125	54.0	2.178	55.32	0.375	10
	XXS			1.771	45.0	1.868	47.45	0.552	14.0
3	40	3.5	88.9	3.068	77.9	3.081	78.26	0.126	5.6
	80			2.900	73.7	2.934	74.52	0.300	8
	160			2.624	66.7	2.692	68.38	0.438	11
	XXS			2.300	58.5	2.409	61.19	0.600	15
3-1/2	40	4.0	101.6	3.548	90.2	3.564	90.53	0.226	5.6
	80			3.364	85.4	3.402	86.41	0.318	8
4	40	4.5	114.3	4.026	102.3	4.044	102.72	0.237	5.9
	80			3.826	97.1	3.869	98.27	0.337	8.8
	120			3.624	92.1	3.692	93.78	0.438	11
	160			3.438	87.3	3.530	89.66	0.531	14.2
	XXS			3.512	80.1	3.279	83.29	0.674	17
5	40	5.56	139.7	5.047	128.1	5.070	128.78	0.258	6.3
	80			4.813	122.3	4.866	126.6	0.375	10
	120			4.563	115.9	4.647	118.03	0.500	12.5
	160			4.313	109.5	4.428	112.47	0.625	16
	XXS			4.063	103.3	4.209	106.91	0.750	19.0
6	40	6.62	168.3	6.065	154.1	6.094	154.79	0.280	7.1
	80			5.761	146.3	5.828	148.03	0.432	11.0
	120			5.501	139.7	5.600	142.24	0.562	14.2
	160			5.187	131.7	5.326	135.28	0.719	17.5
	XXS			4.897	124.5	5.072	128.83	0.864	20
8	40	8.62	219.1	7.981	202.7	8.020	203.71	0.322	8
	60			7.813	198.5	7.873	199.97	0.406	10
	80			7.625	193.7	7.709	195.81	0.500	12.5
	100			7.437	188.9	7.544	191.62	0.594	16
	120			7.187	182.5	7.326	186.08	0.719	17.5
	140			7.001	177.9	7.163	181.94	0.812	20
	160			6.875	174.7	7.053	179.15	0.875	22.2
	XXS			6.813	173.1	6.998	177.75	0.906	22.5

Sleeve Plug Valve

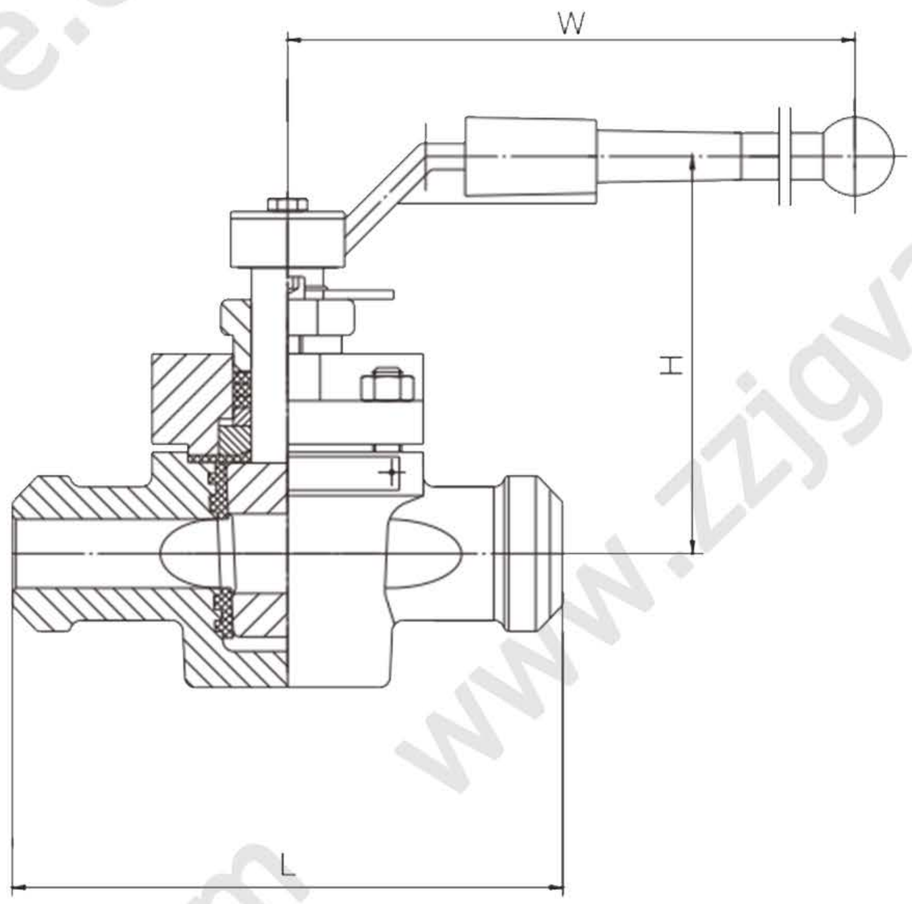

Butt Weld End ASME B16.25-2017									X343F/X43F-150LB
Nominal bore	Pipe number	Outer diameter of welding end		Nominal bore diameter		Machined inner diameter		Pipe wall thickness	
		inch	mm	inch	mm	inch	mm	inch	mm
10.75	40	10.75	273	10.02	254.4	9.834	255.78	0.365	8.8
	60			9.75	247.6	9.834	249.78	0.5	12.5
	80			9.562	242.8	9.670	245.62	0.594	16
	100			9.312	236.4	9.451	240.06	0.719	17.5
	120			9.062	230.2	9.232	234.49	0.844	22.2
	140			8.75	222.2	8.959	227.56	1.000	25
	160			8.5	215.8	8.740	222.00	1.125	28
12.75	STD	12.75	323.9	12.00	304.8	12.053	306.15	0.375	9.5
	40			11.938	303.2	11.999	304.77	0.406	10
	XS			11.750	298.4	11.834	300.58	0.500	12.7
	60			11.626	295.2	11.725	297.82	0.562	14.2
	80			11.374	288.8	11.505	282.23	0.688	17.5
	100			11.062	281.0	11.232	285.29	0.844	22.2
	120			10.750	273.0	10.959	278.36	1.000	25
	140			10.500	266.6	10.740	272.80	1.125	28
	160			10.126	257.2	10.413	264.49	1.312	32
14.00	STD	14.00	355.60	13.250	336.6	13.303	337.90	0.375	9.5
	40			13.124	333.4	13.192	355.08	0.438	11
	XS			13.000	330.2	13.084	332.33	0.500	12.7
	60			12.812	325.4	12.920	32817	0.594	16
	80			12.500	317.6	12.646	321.21	0.750	20
	100			12.124	308.0	12.318	312.88	0.938	25.8
	120			11.812	300.0	12.044	305.92	1.094	28
	140			11.500	2920	11.771	298.98	1.250	32
	160			11.188	284.2	11.498	292.05	1.406	36

ZZJG VALVE MORE VALUE

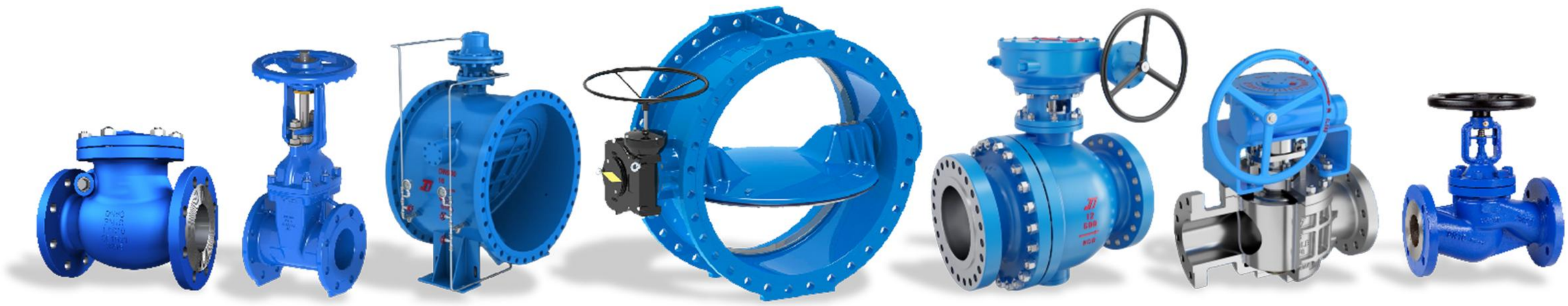

ZHENGZHOU JINGGONG TECHNOLOGY CO., LTD.

Tel: +86-371-55659925

Fax: +86-371-55659926

Email: info@zzjgvalve.com

Web: www.zzjgvalve.com

Address: Chuangye Road, Gaoshan Town, Zhengzhou City, China 450000

All rights reserved by Zhengzhou Jinggong Technology Co., Ltd. The products are protected by patents and legal liability will be pursued for infringement. This sample only introduces some products. If there are any changes without notice, please contact our company to obtain the latest version.