ZZJG VALVE MORE VALUE

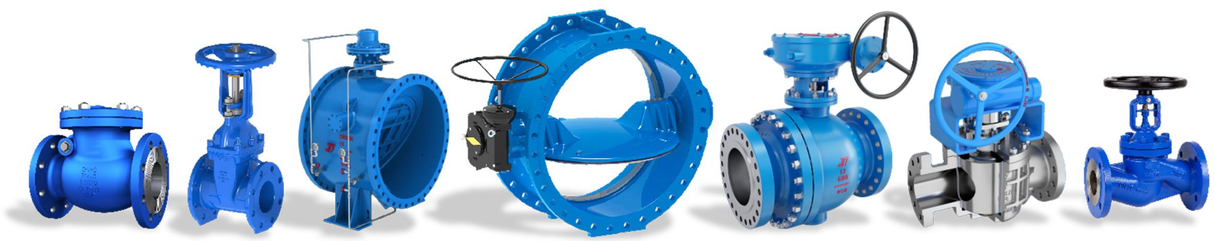

ZZJG VALVE

TOTAL SOLUTIONS FOR FLOW SYSTEM

ZHENGZHOU JINGGONG TECHNOLOGY CO., LTD.

Tel: +86-371-55659925
Fax: +86-371-55659926
Email: info@zzjgvalve.com
Web: www.zzjgvalve.com
Address: Chuangye Road, Gaoshan Town, Zhengzhou City, China 450000

All rights reserved by Zhengzhou Jinggong Technology Co., Ltd. The products are protected by patents and legal liability will be pursued for infringement. This sample only introduces some products. If there are any changes without notice, please contact our company to obtain the latest version.

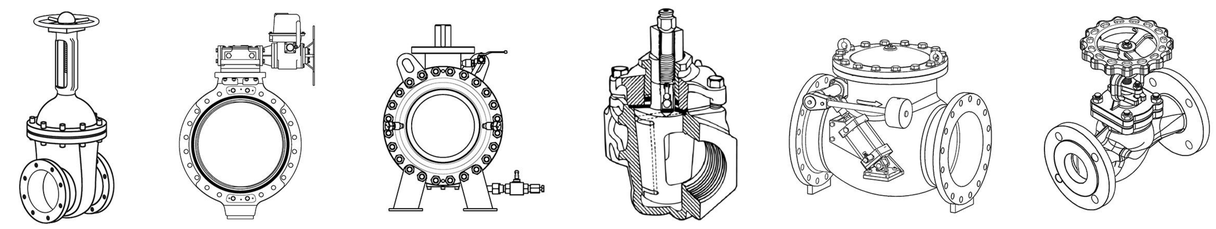

ABOUT US

ZZJG VALVE

ZHENGZHOU JINGGONG TECHNOLOGY CO., LTD is located in "Hometown of Valve in China" Gaoshan Town, Xingyang City, Henan Province. It is a high-tech enterprise in one line of design, manufacturing, sales and services.

Founded in 1981, after more than 40 years of development, it has become a professional valve manufacturer. With 103,180,000 RMB of registered capital, it covers an area of 26,000 ㎡ and owns professional workshops.

Aim: loyal to and customer, optimal management, rigorous and pragmatic and to promote China's valve industry to a higher level and ZZJG brand a leading position.

Certifications: ISO9001 Quality System Certification, ISO14001 Environment System Certification, ISO45001 Occupational Health and Safety Management Certification, TS Special Equipment License, API 6D, API 609, European Union CE Certification, etc.

Main products: PN0.25-32MPa, DN50-3000, soft/metal seal butterfly valves, plug valves, ball valves, gate valves, globe valves, check valves, control valves, etc.

Application: Water engineering, Electric power, Petroleum, Chemical industry, Petrochemical industry, Heating, Pharmaceuticals, Metallurgy, etc.

www.zzjgvalve.com

PRODUCTION WORKSHOP

The company strictly controls and checks the quality of every link and process. Product design has been incorporated into a set of extremely rigorous and precise procedures; from design, material selection, manufacturing, assembly to operation, every link must undergo rigorous testing procedures, strict control, and high quality, so that customers can use it. At the same time, we deeply feel our rigorous and pragmatic quality purpose.

ZZJG VALVE

ZZJG VALVE

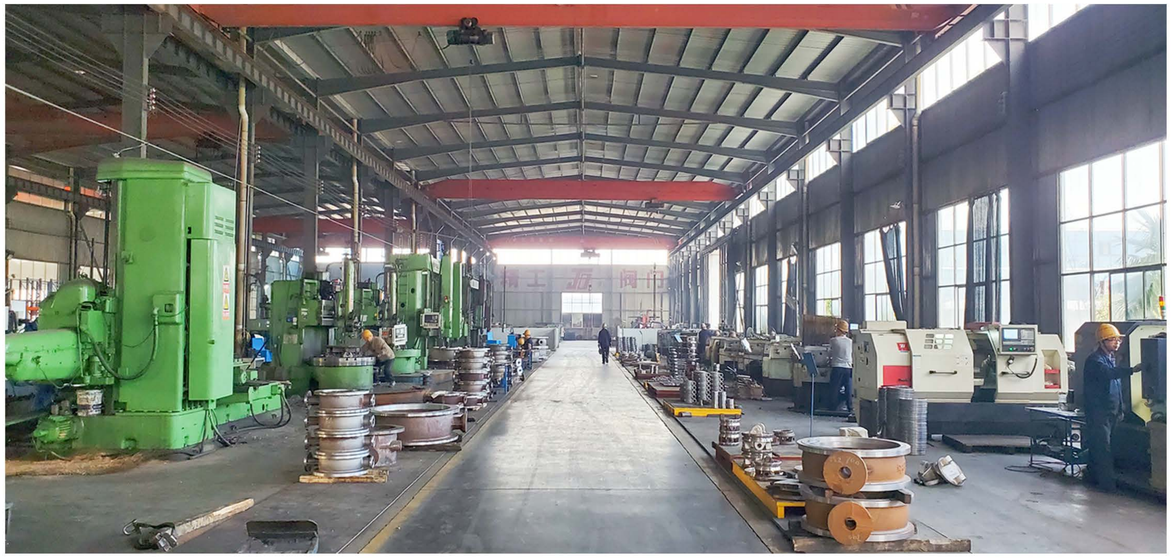

www.zzjgvalve.com

HONORS & QUALIFICATIONS

ZZJG VALVE

中华人民共和国
特种设备生产许可证
Production License of Special Equipment
People's Republic of China

编号：TS2741152-2027

单位名称：郑州精工阀门有限公司
住　　所：荥阳市高山镇创业路中段
制造地址：河南省郑州市荥阳市高山镇创业路中段

经审查，获准从事以下特种设备生产活动：

许可项目	许可子项目	许可参数	备注
压力管道元件制造	压力管道阀门（金属阀门）A1	-	具体产品范围见型式试验证书

发证机关：河南省市场监督管理局　　公章：
发证日期：2023年5月11日
有 效 期：2023年5月11日 至 2027年5月10日

实用新型专利证书

实用新型专利证书

实用新型专利证书

实用新型专利证书

Certificate of Authority to use the Official API Monogram
License Number: 609 ORIGINAL

The American Petroleum Institute hereby grants to
ZHENGZHOU JINGGONG VALVE CO., LTD.
Chuangye Road, Gaoshan Town
Zhengzhou City, Henan Province
People's Republic of China

the right to use the Official API Monogram® on manufactured products under the conditions in the official publications of the American Petroleum Institute entitled API Spec Q1® and **API-609** and in accordance with the provisions of the License Agreement.

In all cases where the Official API Monogram is applied, the API Monogram shall be used in conjunction with this certificate number: **609**

The American Petroleum Institute reserves the right to revoke this authorization to use the Official API Monogram for any reason satisfactory to the Board of Directors of the American Petroleum Institute.

The scope of this license includes the following: Butterfly Valves - Category B

QMS Exclusions: Servicing

Effective Date: JANUARY 22, 2024
Expiration Date: JANUARY 22, 2027

American Petroleum Institute

To verify the authenticity of this license, go to www.api.org/compositalist.

Senior Vice President of Global Industry Services

Certificate of Authority to use the Official API Monogram
License Number: 6D ORIGINAL

The American Petroleum Institute hereby grants to
ZHENGZHOU JINGGONG VALVE CO., LTD.
Chuangye Road, Gaoshan Town
Zhengzhou City, Henan Province
People's Republic of China

the right to use the Official API Monogram® on manufactured products under the conditions in the official publications of the American Petroleum Institute entitled API Spec Q1® and **API-6D** and in accordance with the provisions of the License Agreement.

In all cases where the Official API Monogram is applied, the API Monogram shall be used in conjunction with this certificate number: **6D**

The American Petroleum Institute reserves the right to revoke this authorization to use the Official API Monogram for any reason satisfactory to the Board of Directors of the American Petroleum Institute.

The scope of this license includes the following: Butterfly Valves - Category B

QMS Exclusions: Servicing

Effective Date: JANUARY 22, 2024
Expiration Date: JANUARY 22, 2027

American Petroleum Institute

To verify the authenticity of this license, go to www.api.org/compositalist.

Senior Vice President of Global Industry Services

ENVIRONMENTAL MANAGEMENT SYSTEM CERTIFICATION

OCCUPATIONAL HEALTH & SAFETY MANAGEMENT SYSTEM CERTIFICATION

QUALITY MANAGEMENT SYSTEM CERTIFICATION

CERTIFICATE OF CONFORMITY

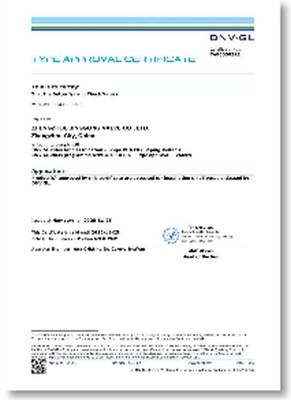

TYPE APPROVAL CERTIFICATE

PED CERTIFICATE OF CONFORMITY

CERTIFICATE

SIL
Functional Safety Certificate

中国石油招标投标网

中国石化物资电子招标投标交易平台 供应商

www.zzjgvalve.com

ZZJG VALVE

ZZJG VALVE

PROCESSING SITE

The company has a technology research and development center and a product processing center. Under the framework of a strict and complete quality management system, the stability and reliability of each product is ensured through sophisticated CNC equipment, mature process flow and superb processing skills.

www.zzjgvalve.com

ZZJG VALVE

ZZJG VALVE

QUALITY ASSURANCE

With the rapid development of science and technology and the continuous improvement of industrial level, higher requirements have been put forward for product mechanical performance and safety standards. The company continues to increase investment in product research and development and quality standards, achieving full-process quality control from raw material testing, production processes, products and applications, providing a better guarantee for corporate innovation and quality.

www.zzjgvalve.com

ZZJG VALVE

ZZJG VALVE

INDUSTRY APPLICATION

Product application range: water conservancy engineering, urban water supply and drainage, sewage treatment, electric power, petroleum, natural gas, chemical industry, heating, pharmaceuticals, metallurgy, etc.

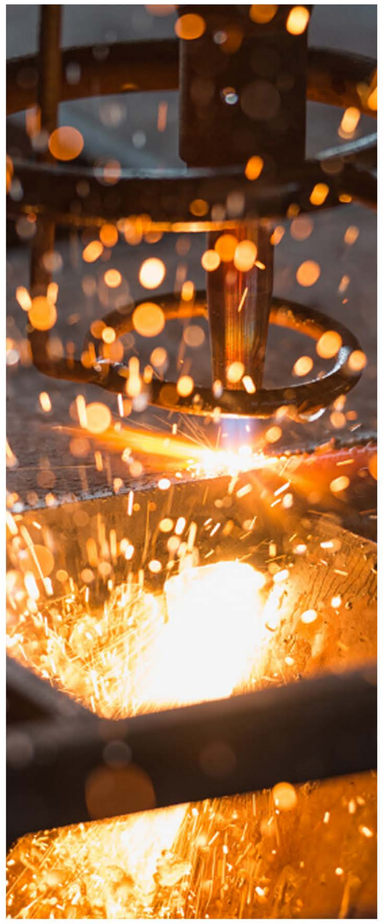

Metallurgy

Natural Gas

Electric Power

Chemical Industry

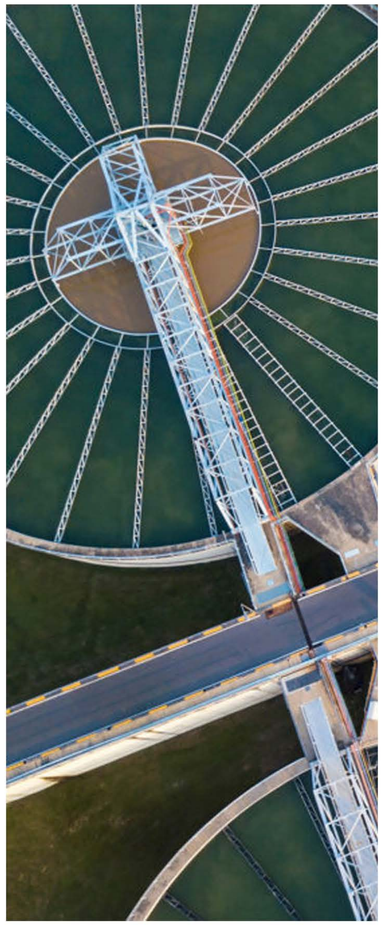

Water Engineering

Petroleum

www.zzjgvalve.com

DBB PLUG VALVE

Double Block and Bleed (DBB) Plug Valve

Overview

Double Block and Bleed (DBB) Plug Valve, also called General Valve or Orbit Plug Valve, ZZJG factory manufacture double block and bleed plug valve reduced and full bore.The action of two sealing vanes of DBB plug valve mounted on the plug is the key to the working principle of the double block and bleed valve.The two separate sealing vanes of the valve are compressed on upper and lower ends of the valve bore(double block), and when the valve is closed, the bleed valve will be opened to check the sealing effect(bleed).

Product Description

Valve body materlal: copper, cast Iron, cast steel, carbon steel, WCB, WCC, WC6, WC9, A105, F11, F22, 304,304L,316,316L, chrome molybdenum steel and so on.

Working pressure:1.0Mpa~15.0Mpa. Class150~900

Working temperature:-196℃ to 650℃.

Connection type: flange

Actuating mode:manual,pneumatic,hydraulic, electric.

Application

Reduced bore and full bore DBB plug valves are suitable for pipelines of aviation kerosene, crude oil, light oil, natural gas, liquefied gas, pipeline gas, chemical media, etc., as an ideal device for cutting off the media.

Main Production Standard

Standard	Name
Design and manufacturing standard	API6D
Structural length standard	ASMEB16.10
Connection flange standard	ASMEB16.5
Pressure and temperature grade standard	ASMEB16.34
Test and inspection standard	API598, API6D

Valve Operation Principle

Valve opening:

When the valve is opened, first rotate the handwheel to lift the plug and pull the sealing slide back from the sealing surfaces on both sides of the valve body. When the slide is completely retracted and separated from the sealing surface of the valve body, continue to turn the handwheel to rotate the plug and the sealing slide 90°, and the valve is in the open position.

Valve closing:

When the valve is closed, first rotate the handwheel to rotate the plug and the sealing slide 90°, then move the plug downward, and as the plug moves, push the sealing slide toward the inner cavity of the valve body until the elastic sealing ring is evenly squeezed to the upper and lower ends of the valve hole to form a seal.

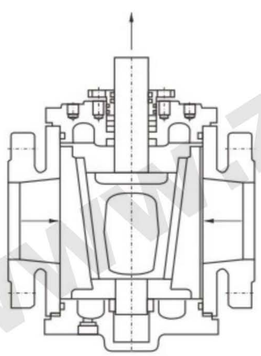

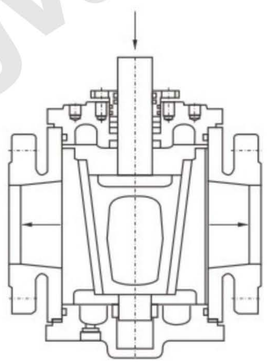

Main Parts Materials

The materials of ZZJG DBB Plug valve and its components can be customized according to customer needs and actual working conditions.

MAIN PARTS MATERIALS		
NO.	Part name	Material
1	Bottom cover	A216 WCB
2	Body	A216 WCB
3	Slide	QT400-18
4	Sealing ring	Viton
5	Cock	A216 WCB
6	O-ing	Viton
7	Windinggasket	SS304+Graphite
8	Packing	Flexible graphite
9	Packinggland	A216 WCB
10	O-ring	Viton
11	O-ring	Viton
12	Flat washer	1035
13	Outer hexagon bolt	8.8 Grade
14	Pinshaft	A276410
15	Retaining ring	65Mn
16	Holder	A216 WCB
17	Grease spout	C28000
18	Flat key	1035
19	Indicator	1035
20	Bonnet	A216 WCB
21	Nut	A1942H
22	Stud	A193 B7
23	Outerhexagon bolt	8.8 Grade
24	Guide pin	410
25	Outer hexagon bolt	8.8 Grade
26	Spring washers	65Mn
27	Nut	A1942H
28	Stud	A193 B7
29	Spring washers	65Mn
30	Bevel gear	WCB
31	Shaft sleeve	C28000
32	Plug	SS304

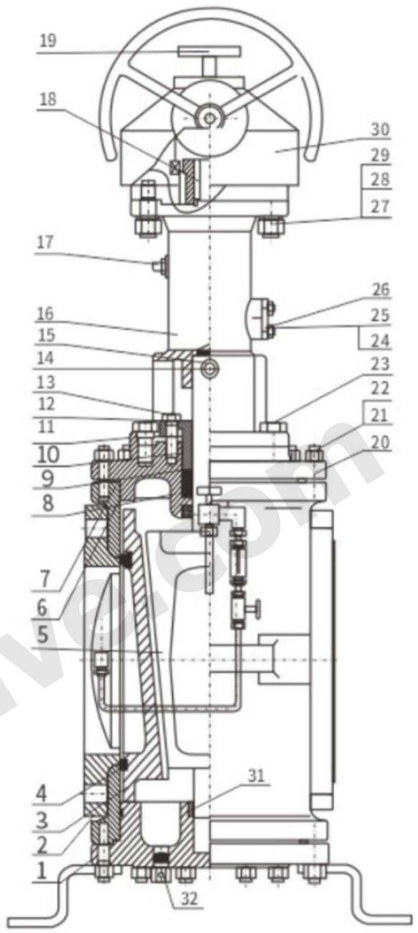

Double Block & Bleak Plug Valve

Technical parameters and dimensions

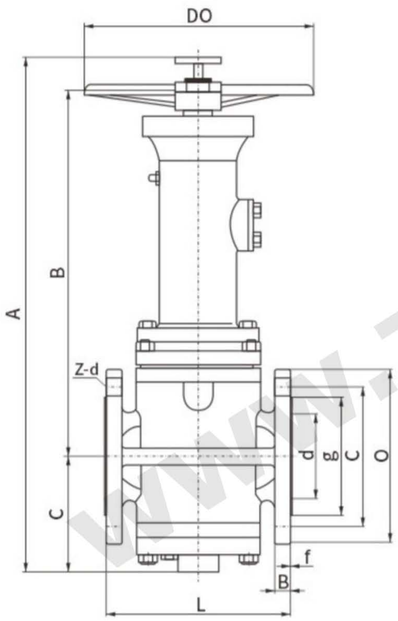

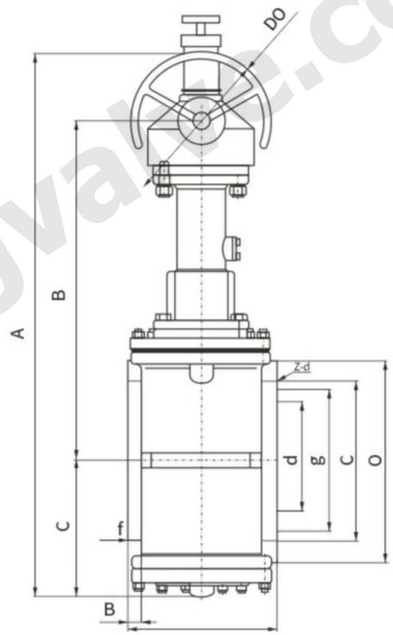

MAIN DIMENSIONS AND WEIGHT 300LB REDUCED BORE,HANDWHEEL,GEAR OPERATION													
DN	IN	L	0	C	g	d	B	f	A	B	C	D0	Z-d
50	2	216	Φ165	Φ127	Φ92	49	23	2	530	382	135	Φ200	8-Φ19
75	3	282	Φ210	Φ168.5	Φ127	74	29	2	590	395	129	Φ250	8-Φ22
100	4	305	Φ255	Φ200	Φ157	100	32.2	2	671	425	171	Φ300	8-Φ22
150	6	403	Φ320	Φ270	Φ216	150	37	2	805	520	210	Φ350	12-Φ22
200	8	419	Φ380	Φ330	Φ270	201	42	2	1096	645	253	Φ400	12-Φ25
250	10	457	Φ445	Φ387.5	Φ324	252	48.1	2	1283	753	280	Φ500	16-Φ29
300	12	502	Φ520	Φ451	Φ381	303	51.3	2	1385	777	331	Φ550	16-Φ32
350	14	762	Φ585	Φ514.5	Φ413	334	54.5	2	1395	790	341	Φ550	20-Φ32
400	16	838	Φ650	Φ571.5	Φ470	385	57.6	2	1654	948	406	Φ600	20-Φ35
450	18	914	Φ710	Φ628.5	Φ533.5	436	60.8	2	1680	960	420	Φ600	24-Φ35
500	20	991	Φ775	Φ686	Φ584	487	64	2	1892	1060	482	Φ600	24-Φ35

MAIN DIMENSIONS AND WEIGHT 150LB REDUCED BORE,HANDWHEEL,GEAR OPERATION													
DN	IN	L	0	C	g	d	B	f	A	B	C	D0	Z-d
50	2	178	Φ150	Φ120.5	Φ92	49	16.5	2	530	382	135	Φ200	4-Φ19
75	3	203	Φ190	Φ152.5	Φ127	74	19.5	2	590	395	129	Φ250	4-Φ19
100	4	229	Φ230	Φ190.5	Φ157	100	24.5	2	671	425	171	Φ300	8-Φ19
150	6	267	Φ280	Φ241.5	Φ216	150	26	2	805	520	210	Φ350	8-Φ22
200	8	292	Φ345	Φ298.5	Φ270	201	29	2	1096	645	253	Φ400	8-Φ22
250	10	330	Φ405	Φ362	Φ324	252	31	2	1283	753	280	Φ500	12-Φ25
300	12	356	Φ485	Φ432	Φ381	303	32.5	2	1385	777	331	Φ550	12-Φ25
350	14	381	Φ535	Φ476.5	Φ413	334	35.5	2	1395	790	341	Φ550	12-Φ29
400	16	406	Φ595	Φ540	Φ470	385	37	2	1654	948	406	Φ600	16-Φ29
450	18	864	Φ635	Φ578	Φ533.5	436	40.1	2	1680	960	420	Φ600	16-Φ32
500	20	914	Φ700	Φ635	Φ584	487	43.3	2	1892	1060	482	Φ600	20-Φ32

MAIN DIMENSIONS AND WEIGHT 600LB REDUCED BORE,HANDWHEEL,GEAR OPERATION													
DN	IN	L	0	C	g	d	B	f	A	B	C	D0	Z-d
50	2	292	Φ165	Φ127	Φ92	49	25.4	2	530	382	135	Φ250	8-Φ19
75	3	356	Φ210	Φ168.3	Φ127	74	31.8	2	590	395	129	Φ300	8-Φ22
100	4	432	Φ275	Φ216	Φ157	100	38.1	2	671	425	171	Φ350	8-Φ25
150	6	559	Φ355	Φ292	Φ216	150	47.7	2	805	520	210	Φ350	12-Φ29
200	8	660	Φ420	Φ349	Φ270	201	55.6	2	1096	645	253	Φ400	12-Φ32
250	10	787	Φ510	Φ432	Φ324	252	63.5	2	1283	753	280	Φ500	16-Φ35
300	12	838	Φ560	Φ489	Φ381	303	66.7	2	1385	777	331	Φ550	20-Φ35
350	14	889	Φ605	Φ527	Φ413	334	69.9	2	1395	790	341	Φ550	20-Φ38
400	16	991	Φ685	Φ603	Φ470	385	76.2	2	1654	948	406	Φ600	20-Φ41
450	18	1092	Φ745	Φ654	Φ533.5	436	82.6	2	1680	960	420	Φ600	20-Φ44
500	20	1194	Φ815	Φ724	Φ584	487	88.9	2	1892	1060	482	Φ600	24-Φ44

www.zzjgvalve.com

Double Block & Bleak Plug Valve

Technical parameters and dimensions

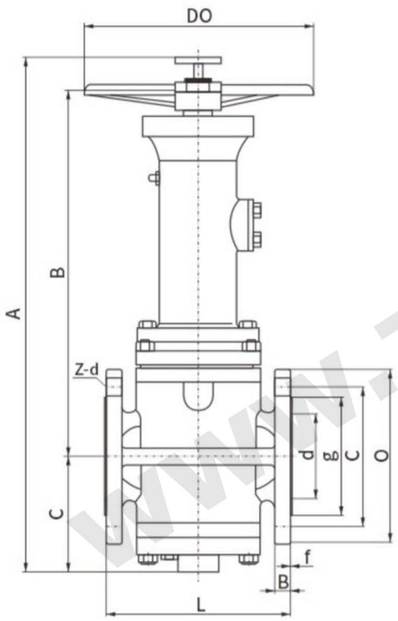

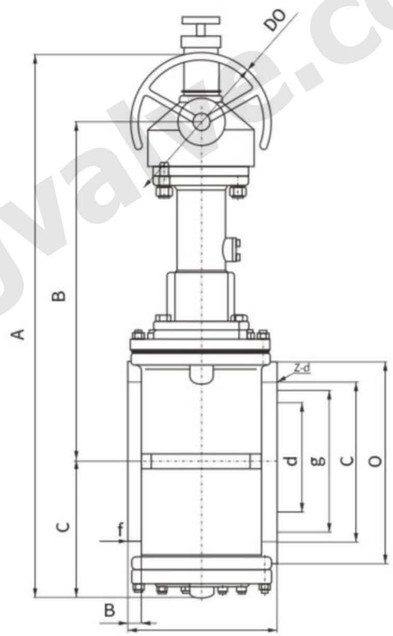

MAIN DIMENSIONS AND WEIGHT PN25 REDUCED BORE,HANDWHEEL,GEAR OPERATION													
DN	IN	L	0	C	g	d	B	f	A	B	C	D0	Z-d
50	2	216	Φ165	Φ125	Φ102	49	20	2	530	382	135	Φ200	4-Φ18
80	3	282	Φ200	Φ160	Φ138	74	24	2	590	395	129	Φ250	8-Φ18
100	4	305	Φ235	Φ190	Φ162	100	24	2	671	425	171	Φ300	8-Φ22
150	6	403	Φ300	Φ250	Φ218	150	28	2	805	520	210	Φ350	8-Φ26
200	8	419	Φ360	Φ310	Φ278	201	30	2	1096	645	253	Φ400	12-Φ26
250	10	457	Φ425	Φ370	Φ335	252	32	2	1283	753	280	Φ500	12-Φ30
300	12	502	Φ485	Φ430	Φ395	303	34	2	1385	777	331	Φ550	16-Φ30
350	14	762	Φ555	Φ490	Φ450	334	38	2	1395	790	341	Φ550	16-Φ33
400	16	838	Φ620	Φ550	Φ505	385	40	2	1654	948	406	Φ600	16-Φ36
450	18	914	Φ670	Φ600	Φ555	436	46	2	1680	960	420	Φ600	20-Φ36
500	20	991	Φ730	Φ660	Φ615	487	48	2	1892	1060	482	Φ600	20-Φ36

MAIN DIMENSIONS AND WEIGHT PN16 REDUCED BORE,HANDWHEEL,GEAR OPERATION													
DN	IN	L	0	C	g	d	B	f	A	B	C	DO	Z-d
50	2	178	Φ165	Φ125	Φ102	49	18	2	530	382	135	Φ200	4-Φ18
80	3	203	Φ200	Φ160	Φ138	74	20	2	590	395	129	Φ250	8-Φ18
100	4	229	Φ220	Φ180	Φ158	100	20	2	671	425	171	Φ300	8-Φ18
150	6	267	Φ285	Φ240	Φ212	150	22	2	805	520	210	Φ350	8-Φ22
200	8	292	Φ340	Φ295	Φ268	201	24	2	1096	645	253	Φ400	12-Φ22
250	10	330	Φ405	Φ355	Φ320	252	26	2	1283	753	280	Φ500	12-Φ26
300	12	356	Φ460	Φ410	Φ378	303	28	2	1385	777	331	Φ550	12-Φ26
350	14	381	Φ520	Φ470	Φ428	334	30	2	1395	790	341	Φ550	16-Φ26
400	16	406	Φ580	Φ525	Φ490	385	32	2	1654	948	406	Φ600	16-Φ30
450	18	864	Φ640	Φ585	Φ550	436	40	2	1680	960	420	Φ600	20-Φ30
500	20	914	Φ715	Φ650	Φ610	487	44	2	1892	1060	482	Φ600	20-Φ33

MAIN DIMENSIONS AND WEIGHT PN40 REDUCED BORE,HANDWHEEL,GEAR OPERATION													
DN	IN	L	0	C	g	d	B	f	A	B	C	D0	Z-d
50	2	216	Φ165	Φ125	Φ102	49	20	2	580	382	135	Φ250	4-Φ18
80	3	282	Φ200	Φ160	Φ138	74	24	2	590	395	129	Φ300	8-Φ18
100	4	305	Φ235	Φ190	Φ162	100	24	2	671	425	171	Φ350	8-Φ22
150	6	403	Φ300	Φ250	Φ218	150	28	2	805	520	210	Φ350	8-Φ26
200	8	419	Φ375	Φ320	Φ285	201	34	2	1096	645	253	Φ400	12-Φ30
250	10	457	Φ450	Φ385	Φ345	252	38	2	1283	753	280	Φ500	12-Φ33
300	12	502	Φ515	Φ450	Φ410	303	42	2	1385	777	331	Φ550	16-Φ33
350	14	762	Φ580	Φ510	Φ465	334	46	2	1395	790	341	Φ550	16-Φ36
400	16	838	Φ660	Φ585	Φ535	385	50	2	1654	948	406	Φ600	16-Φ39
450	18	914	Φ685	Φ610	Φ560	436	57	2	1680	960	420	Φ600	20-Φ39
500	20	991	Φ755	Φ670	Φ615	487	57	2	1892	1060	482	Φ600	20-Φ42

www.zzjgvalve.com